BANKER

3616

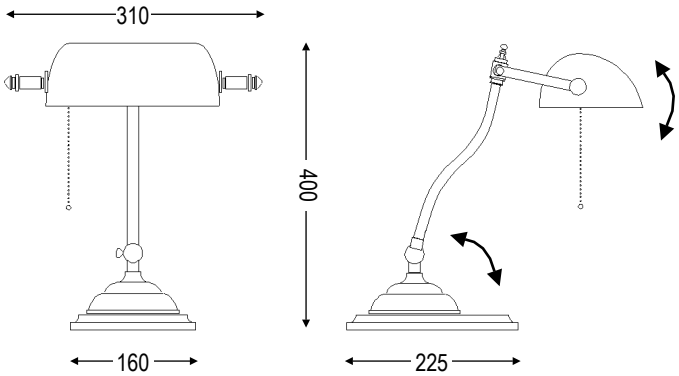

Verre / glass
Base en marbre / marble base
Interrupteur à tirette / pull switch

1x E27 max 60w / 230-240V / 50-60Hz

CE IP20

	decor	ref.
	pat. bronze mat / bronze mat	3616/1/BM/G
	pat. bronze canon de fusil / bronze gunmetal	3616/1/BGM/G
	pat. bronze clair / bronze clear	3616/1/BKL/G
	laiton brillant / polished brass	3616/1/BK/G

DEKNUDT LIGHTING
Stationsstraat 63 - 8540 Deerlijk (Belgium)
t +32.56.713791 - f +32.56.713178
info@deknudtlighting.com www.deknudtlighting.com

2.03 - 06/2012